Technical Data

For detailed data and product description refer to the data sheets at ***www.pepperl-fuchs.com***

General Data	
Installation	non-flush
Type of voltage	DC
Operating voltage	10 ... 30 V
Reverse polarity protection	✔
Short-circuit protection	pulsing
Indication of the switching state	LED, yellow
Housing material	brass, nickel-plated
Protection degree	IP67

Model Number	green = preferred type	NBN22-30GM35-E2	NBN25-30GM50-E0	NBN25-30GM50-E2	NBN22-30GM35-E2-V1	NBN25-30GM50-E0-V1	NBN25-30GM50-E2-V1
Rated operating distance	22 mm	●			●		
	25 mm		●	●		●	●
Switching element function	NPN NO		●			●	
	PNP NO	●		●	●		●
No-load supply current	≤ 10 mA		●	●		●	●
	≤ 12 mA	●			●		
Switching frequency	0 ... 200 Hz		●	●		●	●
	0 ... 80 Hz	●			●		
Operating current	0 ... 100 mA	●			●		
	0 ... 200 mA		●	●		●	●
Ambient temperature	-25 ... 70 °C (-13 ... 158 °F)	●	●	●	●	●	
	-40 ... 70 °C (-40 ... 158 °F)						●
Connection type	Device connector M12 x 1 , 4-pin				●	●	●
	cable PVC , 2 m	●	●	●			

Approvals and Certificates							
UL approval	cULus Listed, General Purpose	●	●	●	●	●	●
CSA approval	cCSAus Listed, General Purpose	●	●	●	●	●	●
CCC approval	Products with a maximum operating voltage of ≤36 V do not bear a CCC marking because they do not require approval.						

Dimensions						
Length L [mm]	35	50	50	50	65	65
Diameter D [mm]	30					
Thread length l_t [mm]	15	32	32	17	32	32
Cap length l_1 [mm]	18					
Connector area l_c [mm]	0			15		
LED position	Pos. C					

Properties

- **Ø30 mm housing**
- **22 mm and 25 mm versions, non-flush mountable**
- **DC, 3-wire switching output**
- **Cable and connector versions**

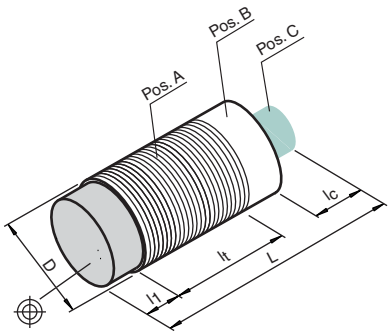

Accessories

This and more accessories can be found in chapter 10

See pages from 972 ... for cordsets **See pages 1068 ... for mounting aids**

BF 30	Mounting flange, 30 mm
V1-G-BK	4-pin, M12 female field-attachable connector
V1-W-BK	4-pin, M12 female field-attachable connector
V1-G-2M-PUR	Cable socket, M12, 4-pin, PUR cable
V1-W-2M-PUR	Cable socket, M12, 4-pin, PUR cable

Electrical Connection

NBN25-30GM50-E0

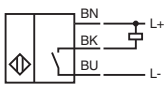

NBN22-30GM35-E2
NBN25-30GM50-E2

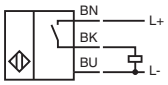

NBN25-30GM50-E0-V1

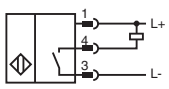

NBN22-30GM35-E2-V1
NBN25-30GM50-E2-V1

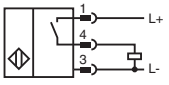

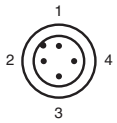

Wire colors in accordance with EN 60947-5-2

1	BN	(brown)
2	WH	(white)
3	BU	(blue)
4	BK	(black)

Date of issue 04/08/2015